AME, Inc.

AME5110

600mA / 1.2MHz PWM Buck DC-DC Converter

■ General Description

The AME5110 family of Fixed Frequency,High Efficiency, Synchronous Buck, DC-DC Converters, apply the latest innovations in Current-Mode Technology. Available in SOT-25 package, these devices are typically twice as efficient as standard LDO's, making them well suited for most portable applications.

The AME5110 is simple to use. As with standard LDO's,(1) Input, and (1) Output capacitor are required. The only other element is a small, low cost, 2.2µH inductor. The AME5110 is availabe with fixed output voltages of 1.5V and 1.8V, or adjustable at 600mA. Using a proprietary "Extreme Green" Technology, battery life is maximized with Frequency Foldback at light Load, and 100% duty when Vin approaches Vout.

■ Features

- High Efficiency "Extreme Green"
- 2.5V to 5.5V Input
- Short Circuit Protection
- Over-Temperature Shutdown
- Under-Volatge Lockout
- Superb Transient Response
- All AME's Lead Free Products Meet RoHS Standards

■ Applications

- Cellular Phones
- Digital Cameras
- Portable Electronics
- USB Devices
- MP3 Players
- LDO Replacement

■ Typical Application

Fixed Voltage Version

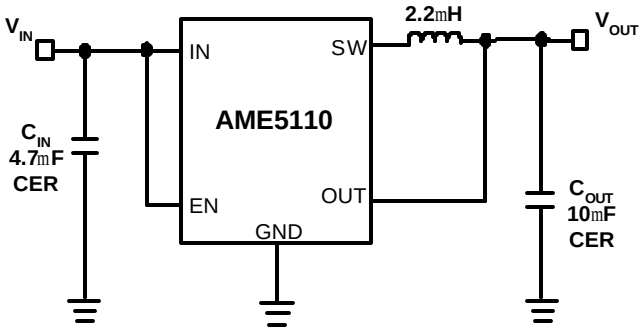

Adjustable Voltage Version

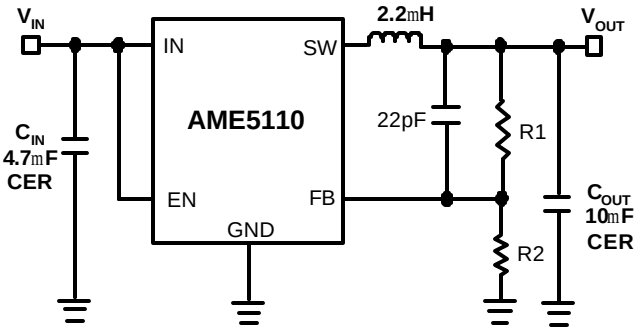

$V_{OUT}=V_{FB}(R1+R2)/R2$

■ Function Diagram

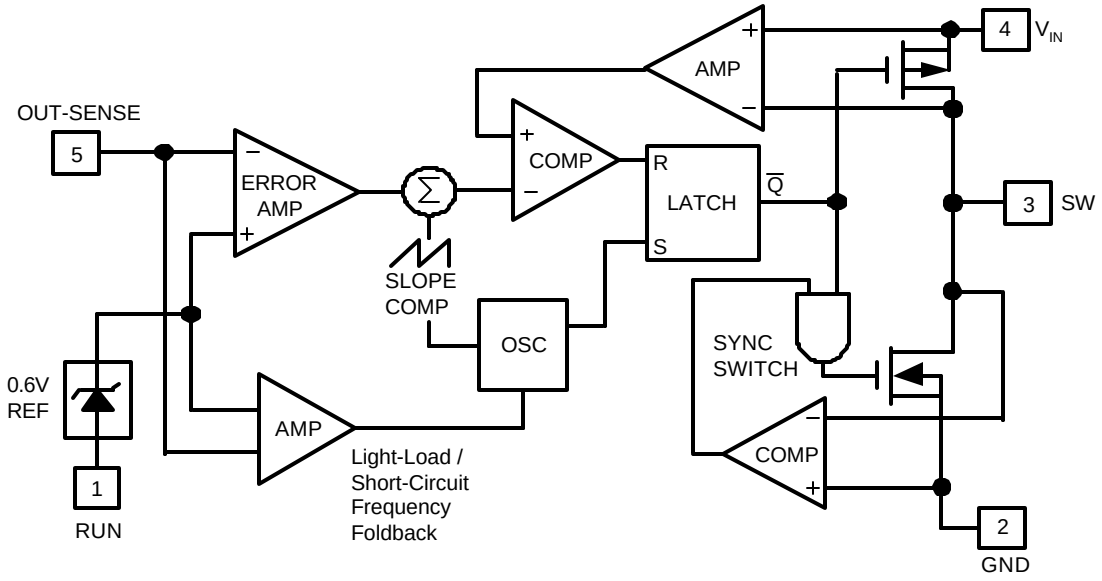

■ Pin Configuration

SOT-25
Top View

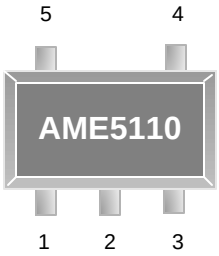

AME5110AEEVxxx

1. EN
2. GND
3. SW
4. IN
5. OUT

*** Die Attach:**
Conductive Epoxy

SOT-25
Top View

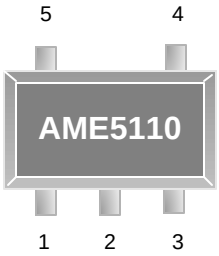

AME5110BEEVADJ

1. EN
2. GND
3. SW
4. IN
5. FB

*** Die Attach:**
Conductive Epoxy

■ Pin Description

Pin Number		Pin Name	Pin Description
AME5110AEEVxxx	AME5110BEEVADJ		
1	1	EN	Enable Control Input. Forcing this pin above 1.5V enables the part. Forcing this pin below 0.3V shuts down the device. In shutdown, all functions are disabled drawing <1µA supply current. Do not leave EN floating.
2	2	GND	Ground Pin
3	3	SW	Switch Node Connection to Inductor. This pin connects to the drains of the internal main and synchronous power MOSFET switches.
4	4	IN	Main Supply Pin. Must be closely decoupled to GND, Pin2, with a 2.2µF or greater ceramic capactior.
N/A	5	FB	Feedback Pin. Receives the feedback voltage from an external resistive divider across the output.
5	N/A	OUT	Output Voltage for fixed version

■ Ordering Information

AME5110 x x x x xxx x

- Special Feature
- Output Voltage
- Number of Pins
- Package Type
- Operating Ambient Temperature Range
- Pin Configuration

Pin Configuration	Operating Ambient Temperature Range	Package Type	Number of Pins	Output Voltage	Special Feature
A (SOT-25) 1. EN 2. GND 3. SW 4. IN 5. OUT B (SOT-25) 1. EN 2. GND 3. SW 4. IN 5. FB	E: -40°C to 85°C	E: SOT-2X	V: 5	150: 1.5V 180: 1.8V ADJ: Adjustable	Z: Lead free Y: Lead free & Low profile

■ Ordering Information

Part Number	Marking*	Output Voltage	Package	Operating Ambient Temperature Range
AME5110AEEV150Y	BARww	1.5V	TSOT-25	-40°C to 85°C
AME5110AEEV150Z	BARww	1.5V	SOT-25	-40°C to 85°C
AME5110AEEV180Y	BASww	1.8V	TSOT-25	-40°C to 85°C
AME5110AEEV180Z	BASww	1.8V	SOT-25	-40°C to 85°C
AME5110BEEVADJY	BATww	ADJ	TSOT-25	-40°C to 85°C
AME5110BEEVADJZ	BATww	ADJ	SOT-25	-40°C to 85°C

Note: ww represents the date code and pls refer to Date Code Rule page on Package Dimension.
* A line on top of the first letter represents lead free plating such as BARww.
Please consult AME sales office or authorized Rep./Distributor for the availability of package type.

■ Absolute Maximum Ratings

Parameter	Symbol	Maximum	Unit
Input Supply Voltage	V_{IN}	GND-0.3 to 6	V
EN, FB Voltages	V_{EN},V_{FB}	GND-0.3 to V_{IN}	V
SW Voltage	V_{SW}	GND-0.3 to V_{IN}+0.3	V
ESD Classification	C*		

Caution: Stress above the listed absolute maximum rating may cause permanent damage to the device
* HBM C: 4000V+

■ Recommended Operating Conditions

Parameter	Symbol	Rating	Unit
Ambient Temperature Range	T_A	- 40 to 85	^oC
Junction Temperature Range	T_J	- 40 to 125	^oC
Storage Temperature Range	T_{STG}	- 65 to 150	^oC

■ Thermal Information

Parameter	Package	Die Attach	Symbol	Maximum	Unit
Thermal Resistance* (Junction to Case)	SOT-25	Conductive Epoxy	θ_{JC}	81	^oC / W
Thermal Resistance (Junction to Ambient)			θ_{JA}	260	^oC / W
Internal Power Dissipation			P_D	400	mW
Maximum Junction Temperature				150	^oC
Solder Iron (10 Sec)**				350	^oC

* Measure θ_{JC} on center of molding compound if IC has no tab.
** MIL-STD-202G210F

■ Electrical Specifications

T_A=25°C. V_{IN}=3.6V unless otherwise specified.

Parameter	Symbol	Test Condition		Min	Typ	Max	Units
Input Volatge	V_{IN}			2.5		5.5	V
Feedback Current	I_{FB}			-30		+30	nA
Regulated Feedback Voltage	V_{FB}	T_A=25°C	AME 5110BEEVADJZ and AME 5110BEEVADJY	0.5880	0.6	0.6250	V
		T_A= 0°C to 85°C		0.5865	0.6	0.6280	
		T_A= -40°C to 85°C		0.5820	0.6	0.6300	
Feedback Voltage Line Regulation	ΔV_{FB}	V_{IN}=2.5V to 5.5V			0.04	0.4	%/V
Regulated Output Voltage	V_{OUT}	V_{OUT}=1.5V, I_{OUT}=100mA	AME 5110AEEVxxxZ and AME 5110AEEVxxxY	1.455	1.5	1.545	V
		V_{OUT}=1.8V, I_{OUT}=100mA		1.746	1.8	1.854	
Output Voltage Line Regulation	REG_{LINE}	V_{IN}=2.5V to 5.5V			0.04	0.4	%/V
Switch Current Limit	I_{CL}	V_{IN}=3V, V_{FB}=0.5V Duty Cycle < 35%	AME 5110BEEVADJZ and AME 5110BEEVADJY		1.7		A
		V_{IN}=3V, V_{OUT}=90% Duty Cycle < 35%	AME 5110AEEVxxxZ and AME 5110AEEVxxxY				
Output Voltage Load Regulation	REG_{LOAD}				5		%
Shutdown Current	I_{SD}	V_{EN}=0V, V_{IN}=4.2V	T_A= -40°C to 85°C		0.1	1	µA
Quiescent Current	I_Q	V_{FB}=0.5V or V_{OUT}=90% V_{EN}=V_{IN}=4.2V	T_A= -40°C to 85°C		350	500	
Oscillator Frequency	f_{OSC}	V_{IN}=2.5V & I_{OUT}=100mA			1.2		MHz
		V_{FB}=0V or V_{OUT}=0V			310		kHz
R_{DSON} of P-Channel FET	$R_{DSON(P)}$	I_{SW}=100mA			0.4	0.5	Ω
R_{DSON} of N-Channel FET	$R_{DSON(N)}$	I_{SW}= -100mA			0.35	0.45	Ω
Switch Leakage Current	I_{SW}	V_{EN}=0V, V_{SW}=0V or 5V,V_{IN}=5V		-1		+1	µA
EN Input Threshold (High)	V_{EH}	T_A= -40°C to 85°C		1.5			V
EN Input Threshold (Low)	V_{EL}	T_A= -40°C to 85°C				0.3	
EN Input Current	I_{EN}	T_A= -40°C to 85°C		-1		+1	µA

Shutdown Current vs V_{IN}

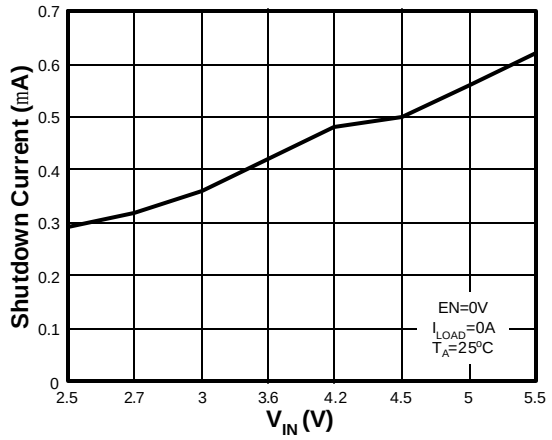

Output Voltage vs. Load Current

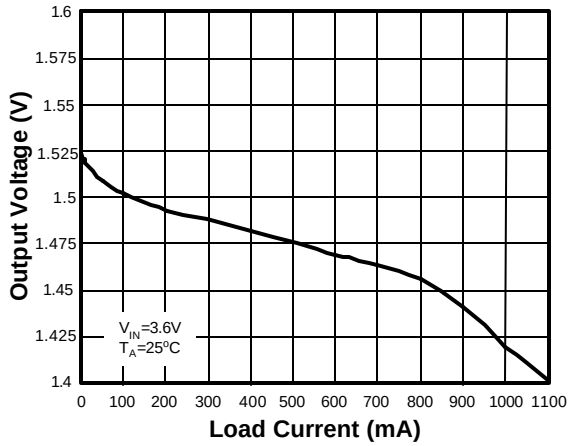

EN Threshold-Turn On vs. V_{IN}

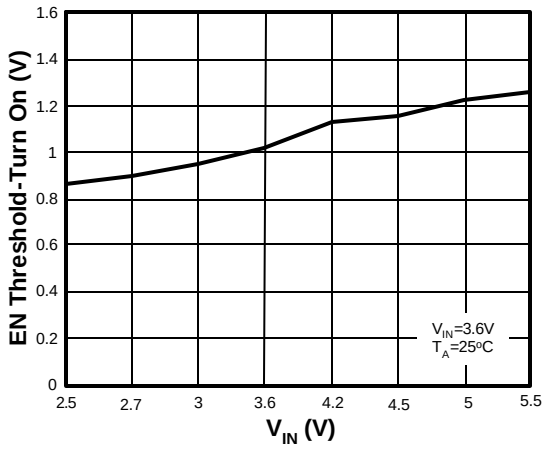

EN Threshold-Turn Off vs. V_{IN}

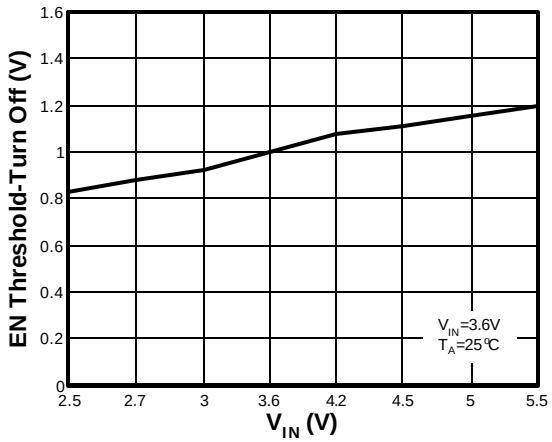

Supply Current vs Supply Voltage

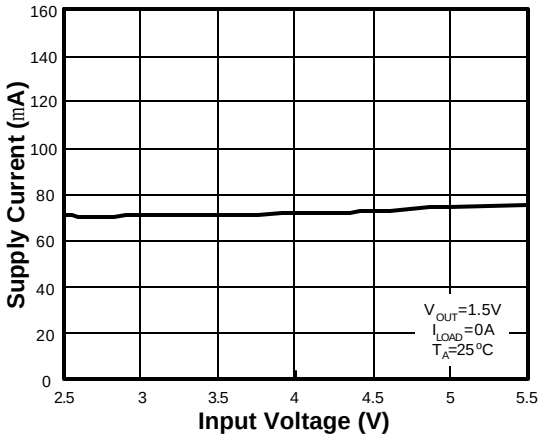

Oscillator Frequency vs. Supply Voltage

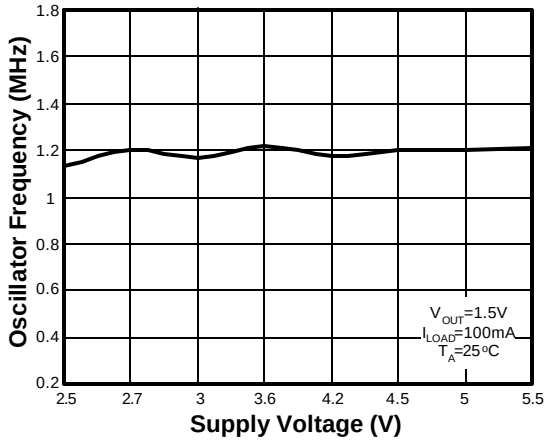

EN Leakage Current vs. V_{IN}

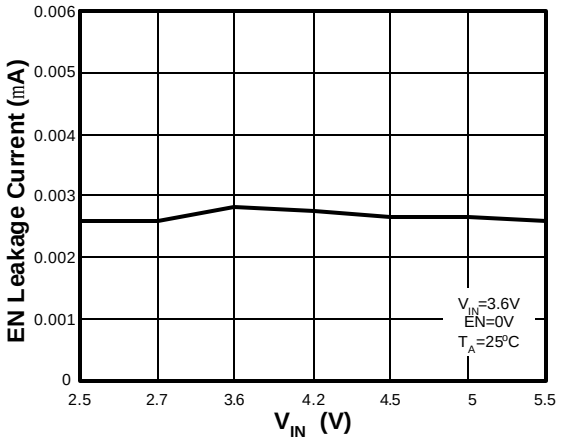

Supply Current vs. Temp

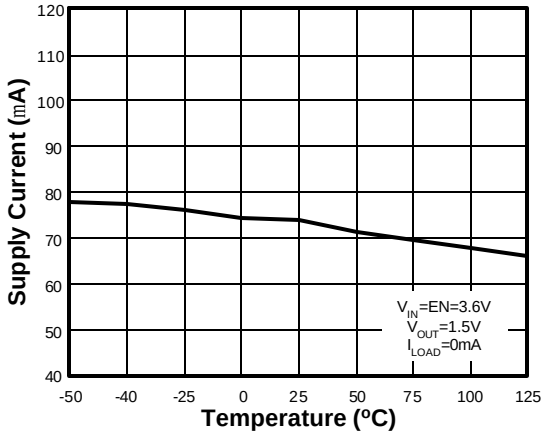

R_{DSON} vs Input Voltage

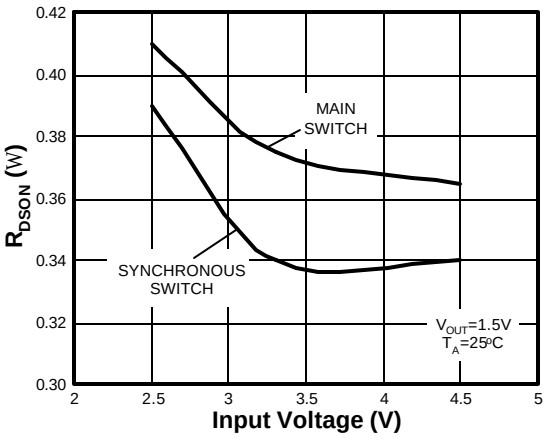

EN Threshold-Turn On vs. Temp

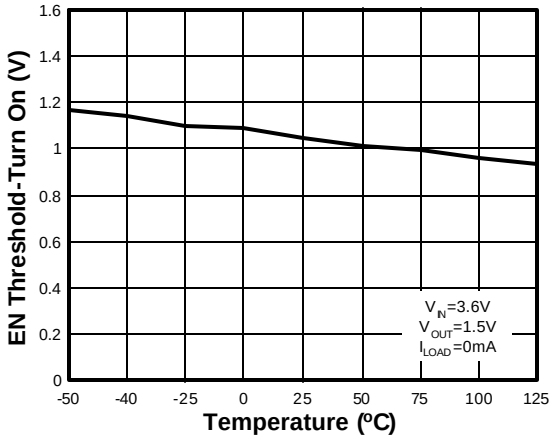

V_{OUT} vs. Temperature

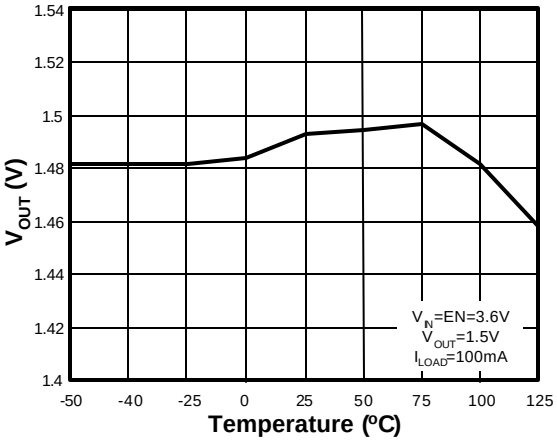

EN Threshold-Turn Off vs. Temp

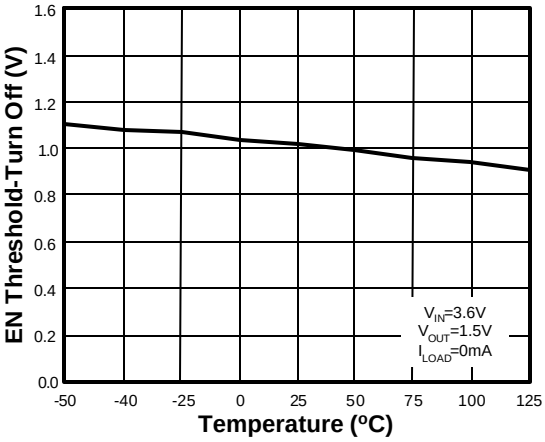

EN Leakage Current vs. Temp

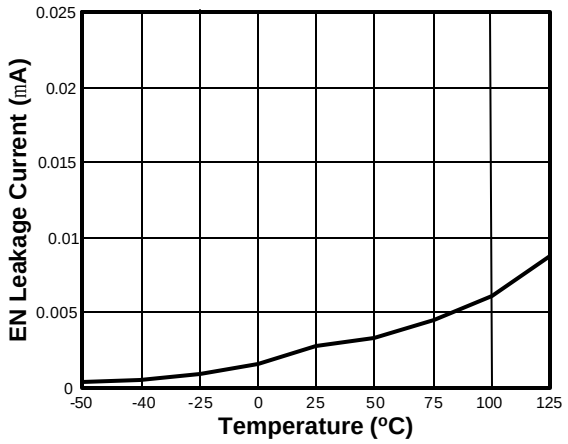

Discontinuous Operation

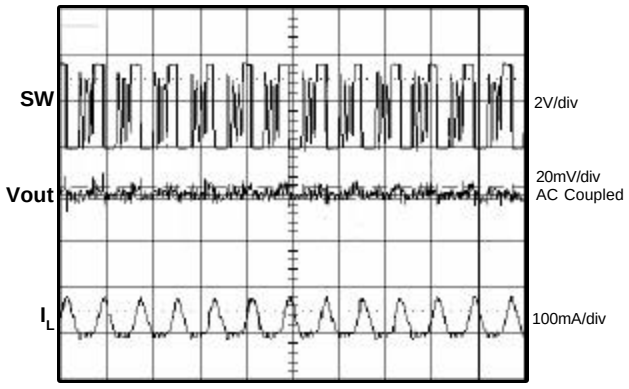

V_{IN}=3.6V
V_{OUT}=1.5V
I_{LOAD}=50mA
T_A=25ºC

1mS/DIV

■ Date Code Rule

Marking			Date Code		Year
A	A	A	W	W	xxx0
A	A	A	W	W	xxx1
A	A	A	W	W	xxx2
A	A	A	W	W	xxx3
A	A	A	W	W	xxx4
A	A	A	W	W	xxx5
A	A	A	W	W	xxx6
A	A	A	W	W	xxx7
A	A	A	W	W	xxx8
A	A	A	W	W	xxx9

■ Tape and Reel Dimension

SOT-25

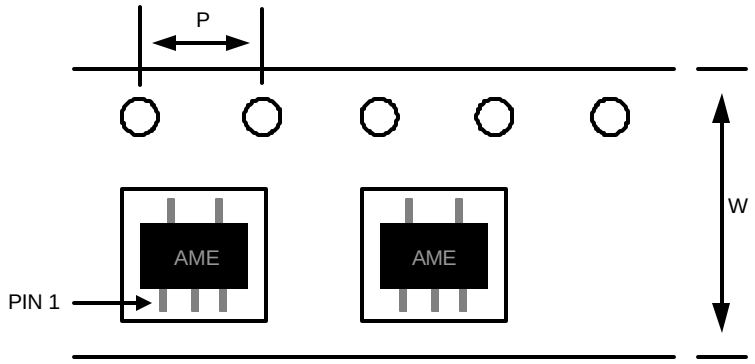

Carrier Tape, Number of Components Per Reel and Reel Size

Package	Carrier Width (W)	Pitch (P)	Part Per Full Reel	Reel Size
SOT-25	8.0±0.1 mm	4.0±0.1 mm	3000pcs	180±1 mm

■ Tape and Reel Dimension

TSOT-25

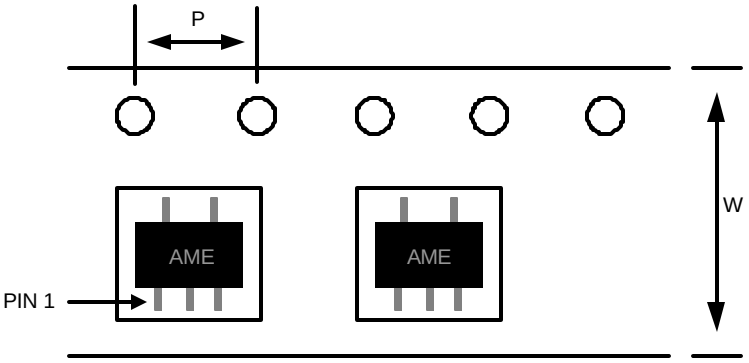

Carrier Tape, Number of Components Per Reel and Reel Size

Package	Carrier Width (W)	Pitch (P)	Part Per Full Reel	Reel Size
TSOT-25	8.0±0.1 mm	4.0±0.1 mm	3000pcs	180±1 mm

■ Package Dimension

SOT-25

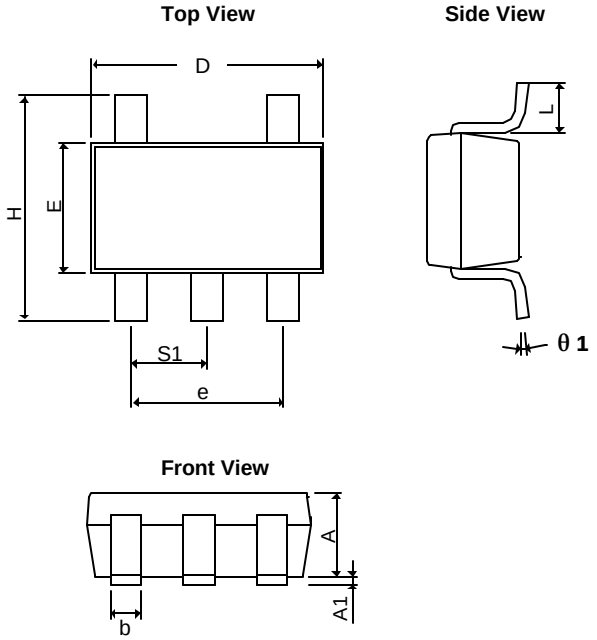

SYMBOLS	MILLIMETERS		INCHES	
	MIN	MAX	MIN	MAX
A	1.20REF		0.0472REF	
A_1	0.00	0.15	0.0000	0.0059
b	0.30	0.55	0.0118	0.0217
D	2.70	3.10	0.1063	0.1220
E	1.40	1.80	0.0551	0.0709
e	1.90 BSC		0.07480 BSC	
H	2.60	3.00	0.10236	0.11811
L	0.37BSC		0.0146BSC	
q1	0°	10°	0°	10°
S_1	0.95BSC		0.0374BSC	

TSOT-25

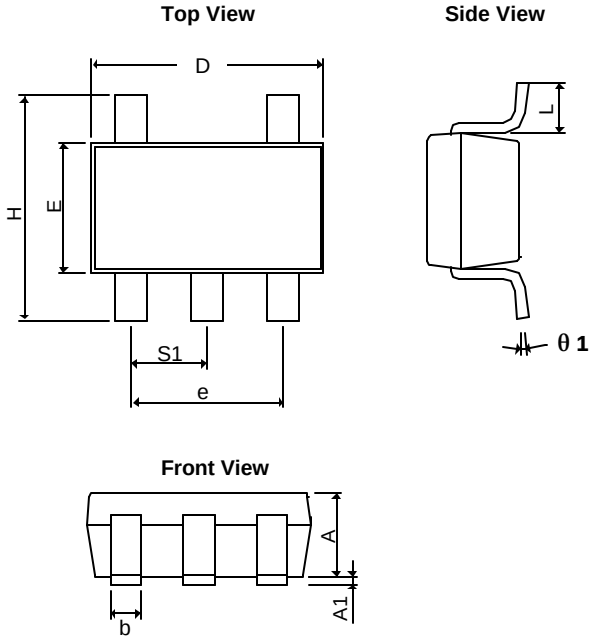

SYMBOLS	MILLIMETERS		INCHES	
	MIN	MAX	MIN	MAX
$A+A_1$	0.90	1.25	0.0354	0.0492
b	0.30	0.50	0.0118	0.0197
c	0.09	0.25	0.0035	0.0098
D	2.70	3.10	0.1063	0.1220
E	1.40	1.80	0.0551	0.0709
e	1.90 BSC		0.07480 BSC	
H	2.40	3.00	0.09449	0.11811
L	0.35BSC		0.0138BSC	
q1	0°	10°	0°	10°
S_1	0.95BSC		0.0374BSC	

www.ame.com.tw
E-Mail: sales@ame.com.tw

Life Support Policy:
These products of AME, Inc. are not authorized for use as critical components in life-support devices or systems, without the express written approval of the president of AME, Inc.

AME, Inc. reserves the right to make changes in the circuitry and specifications of its devices and advises its customers to obtain the latest version of relevant information.

© AME, Inc. , November 2006

Document: 2073-DS5110-B.01

Corporate Headquarter
AME, Inc.
2F, 302 Rui-Guang Road, Nei-Hu District
Taipei 114, Taiwan.
Tel: 886 2 2627-8687
Fax: 886 2 2659-2989

U.S.A. (Subsidiary)
Analog Microelectronics, Inc.
3100 De La Cruz Blvd., Suite 201
Santa Clara, CA. 95054-2438
Tel : (408) 988-2388
Fax: (408) 988-2489