Advanced Power Electronics Corp.

APE1117A

Preliminary

1A Low Dropout Positive Adjustable or Fixed-Mode Regulator

■ Features

- 1.4V maximum dropout at full load current
- Fast transient response
- Output current limiting
- Built-in thermal shutdown
- Needs Only 1uF Capacitor for stability
- Good noise rejection
- 3-Terminal Adjustable or Fixed 1.5V, 1.8V, 1.9V, 2.5V, 3.3V, 5.0V
- Low ESR Ceramic Capacitor for output stability
- Packages: SOT223, TO252, SOT89,
- RoHS Compliant

■ Applications

- PC peripheral
- Communication
- LCD Modules

■ General Description

APE1117A is a low dropout positive adjustable or fixed-mode regulator with minimum of 1A output current capability.The regulator is able to operate with output Capacitors as small as 1uF Ceramic Capacitor for stability.The product is specifically designed to provide well-regulated supply for low voltage IC applications such as high-speed bus termination and low current 3.3V logic supply. APE1117A is also well suited for other applications such as VGA cards. APE1117A is guaranteed to have lower than 1.4V dropout at full load current making it ideal to provide well-regulated outputs of 1.25 to 5.0 with 6.4V to 12V input supply.

■ Ordering Information

APE 1117A X XX

- Low Dropout Regulator
- Package
  - K : SOT223-3L
  - H : TO252-3L
  - G : SOT89-3L
- Vout
  - Blank : ADJ
  - 15 : 1.5V
  - 18 : 1.8V
  - 19 : 1.9V
  - 25 : 2.5V
  - 33 : 3.3V
  - 50 : 5.0V

■ Typical Circuit

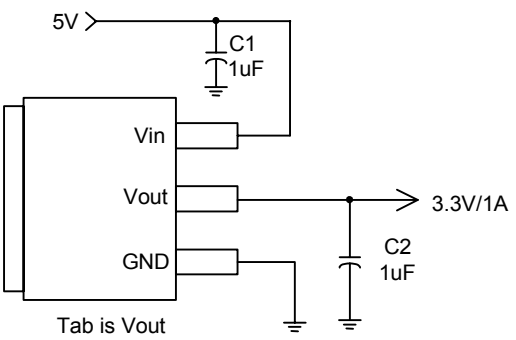

(5V/3.3V fixed output)

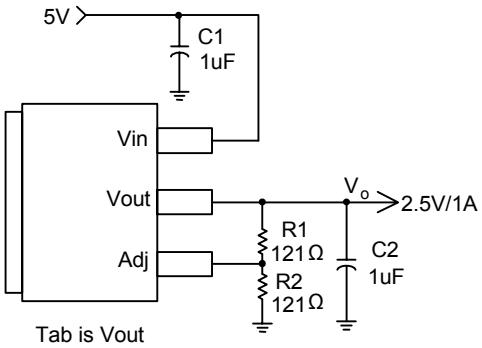

(5V/2.5V ADJ output)

Note: $V_o = V_{REF} * (1 + \frac{R_2}{R_1})$

This datasheet contains new product information. Advanced Power Electronics Corp. reserves the rights to modify the product specification without notice. No liability is assumed as a result of the use of this product. No rights under any patent accompany the sale of the product.

■ Connection Diagram

3 PIN SOT223

(Top View)

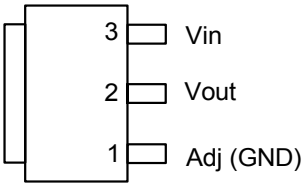

Tab is Vout

3 PIN TO252

(Top View)

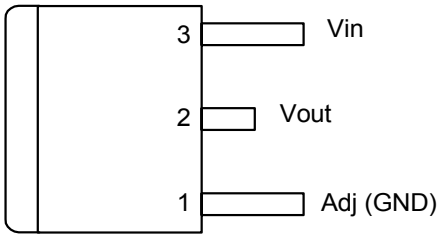

Tab is Vout

3 PIN SOT89

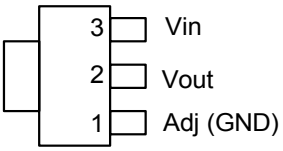

Tab is Vout

■ Block Diagram

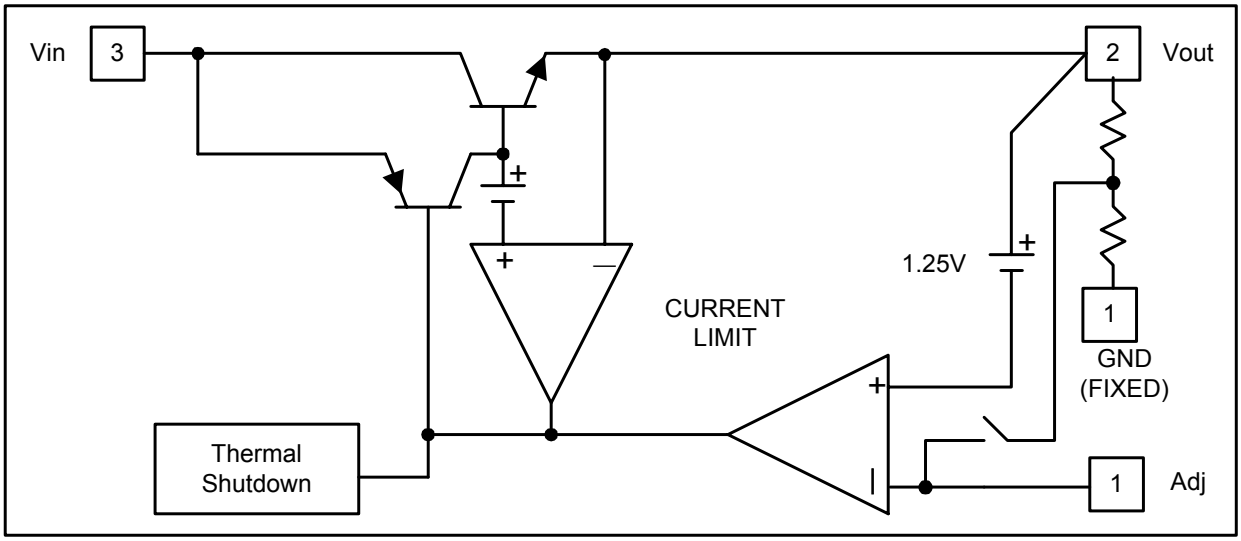

■ Pin Descriptions

NAME	I/O	PIN #	FUNCTION
Adj (GND)	I	1	A resistor divider from this pin to the Vout pin and ground sets the output voltage. (Ground only for Fixed-Mode)
Vout	O	2	The output of the regulator. A minimum of 1uF capacitor must be connected from this pin to ground to insure stability.
Vin	I	3	The input pin of regulator. A minimum of 1uF capacitor is connected from this pin to ground to insure that the input voltage does not sag below the minimum dropout voltage during the load transient response. This pin must always be 1.4V higher than Vout in order for the device to regulate properly.

■ Absolute Maximum Ratings

Symbol	Parameter	Rating	Unit
Vin	DC Supply Voltage	-0.3 to 16	V
P_D	Power Dissipation	Internally Limited	
T_{ST}	Storage Temperature	-65 to +150	^oC
T_{OP}	Operating Junction Temperature Range	0 to +150	^oC

■ Electrical Characteristics (Under Operating Conditions)

PARAMETER	CONDITIONS		MIN	TYP	MAX	UNIT
Reference Voltage	APE1117A-ADJ	T_J=25°C,(V_{IN-OUT})=1.5V I_O=10mA	1.225	1.250	1.275	V
Output Voltage	APE1117A-1.5	I_{OUT} = 10mA, T_J = 25°C, 3V≦V_{IN}≦12V	1.470	1.500	1.530	V
	APE1117A-1.8	I_{OUT} = 10mA, T_J = 25°C, 3.3V≦V_{IN}≦12V	1.764	1.800	1.836	V
	APE1117A-1.9	I_{OUT} = 10mA, T_J = 25°C, 3.3V≦V_{IN}≦12V	1.862	1.900	1.938	V
	APE1117A-2.5	I_{OUT} = 10mA, T_J = 25°C, 4V≦V_{IN}≦12V	2.450	2.500	2.550	V
	APE1117A-3.3	I_{OUT} = 10mA, T_J = 25°C, 4.8V≦V_{IN}≦12V	3.235	3.300	3.365	V
	APE1117A-5.0	I_{OUT} = 10mA, T_J = 25°C, 6.5V≦V_{IN}≦12V	4.900	5.000	5.100	V
Line Regulation	APE1117A-XXX	I_O=10mA,V_{OUT}+1.5V<V_{IN}<Vout+6V, T_J=25°C			0.2	%
Load Regulation	APE1117A-ADJ	V_{IN}=3.3V,Vadj=0,0mA<Io<1A, T_J=25°C (Note 1,2)			1	%
	APE1117A-1.5	V_{IN}=3V, 0mA<Io<1A, T_J=25°C (Note 1,2)		12	15	mV
	APE1117A-1.8	V_{IN}=3.3V, 0mA<Io<1A, T_J=25°C (Note 1,2)		15	18	mV
	APE1117A-1.9	V_{IN}=3.3V, 0mA<Io<1A, T_J=25°C (Note 1,2)		16	19	mV
	APE1117A-2.5	V_{IN}=4V, 0mA<Io<1A, T_J=25°C (Note 1,2)		20	25	mV
	APE1117A-3.3	V_{IN} = 5V, 0≦I_{OUT}≦1A, T_J=25°C (Note 1,2)		26	33	mV
	APE1117A-5.0	V_{IN} = 8V, 0≦I_{OUT}≦1A, T_J=25°C (Note 1,2)		40	50	mV
Dropout Voltage (V_{IN}-V_{OUT})	APE1117A-ADJ/1.5/1.8 /1.9/2.5/3.3/5.0	I_{OUT} = 1A ,ΔV_{OUT}=1%V_{OUT}		1.3	1.4	V
Current Limit	APE1117A-ADJ/1.5/1.8 /1.9/2.5/3.3/5.0	(V_{IN}-V_{OUT}) = 5V	1. 1			A
Minimum Load Current	APE1117A-XXX	0°C≦Tj≦125°C		1	3	mA
Thermal Regulation	T_A=25°C, 30ms pulse			0.008	0.04	%/W
Ripple Rejection	F=120Hz,C_{OUT}=25uF Tantalum, I_{OUT}=1A					
	APE1117A-XXX	V_{IN}=V_{OUT}+3V		60	70	dB
Temperature Stability	I_O=10mA			0.5		%
θ_{JA} Thermal Resistance Junction-to-Ambient(No heat sink ;No air flow)	SOT89 SOT-223 TO-252			300 117 92		°C/W
θ_{JC} Thermal Resistance Junction-to-Case	SOT89 : Control Circuitry/Power Transistor SOT-223 : Control Circuitry/Power Transistor TO-252 : Control Circuitry/Power Transistor			100 15 10		°C/W

Note1: See thermal regulation specifications for changes in output voltage due to heating effects. Line and load regulation are measured at a constant junction temperature by low duty cycle pulse testing. Load regulation is measured at the output lead = 1/18" from the package.

Note2: Line and load regulation are guaranteed up to the maximum power dissipation of 15W. Power dissipation is determined by the difference between input and output differential and the output current. Guaranteed maximum power dissipation will not be available over the full input/output range.

Note3: Quiescent current is defined as the minimum output current required in maintaining regulation. At 12V input/output differential the device is guaranteed to regulate if the output current is greater than 10mA.

■ Typical Performance Characteristics

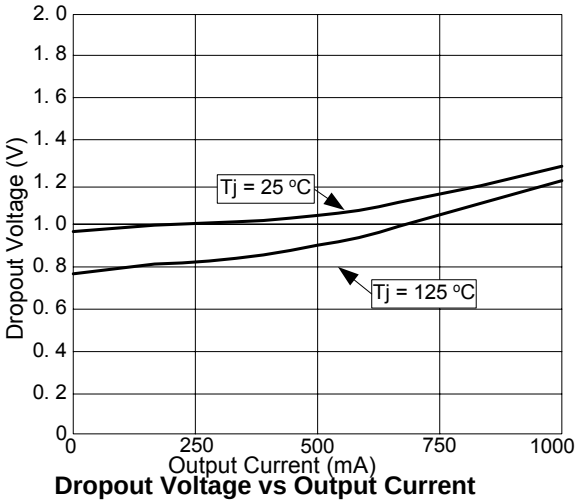

Dropout Voltage vs Output Current

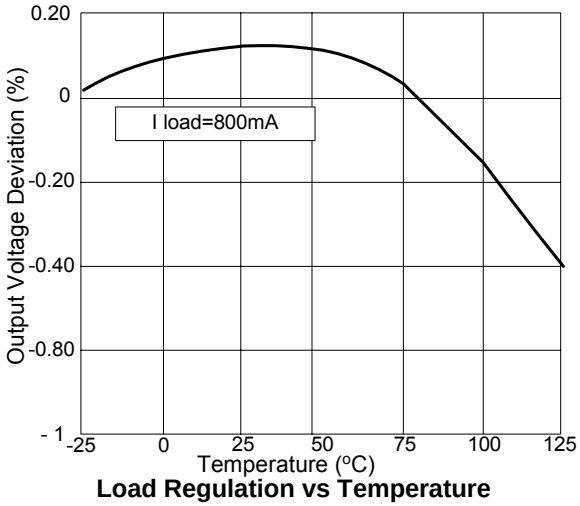

Load Regulation vs Temperature

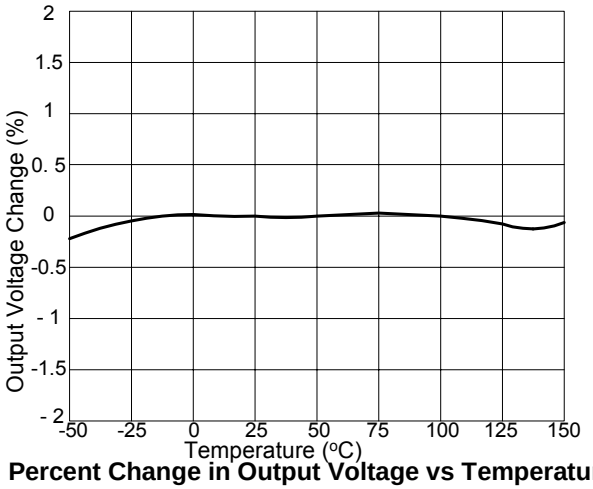

Percent Change in Output Voltage vs Temperature

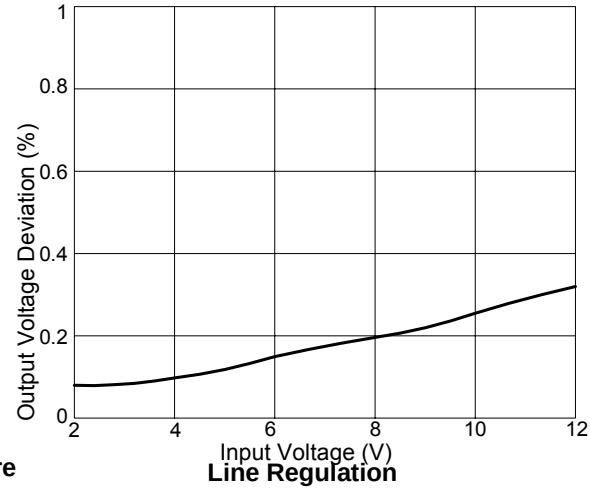

Line Regulation

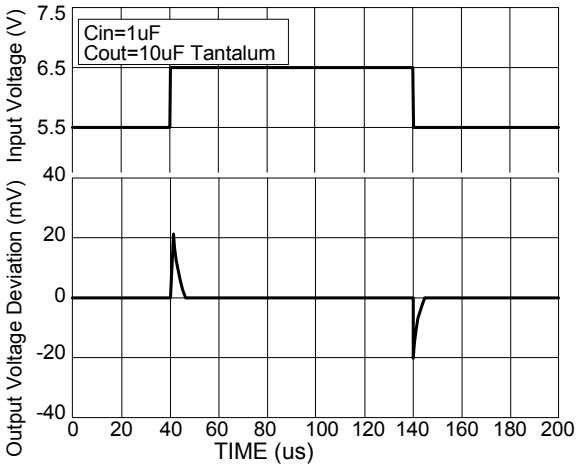

Line Transient Response

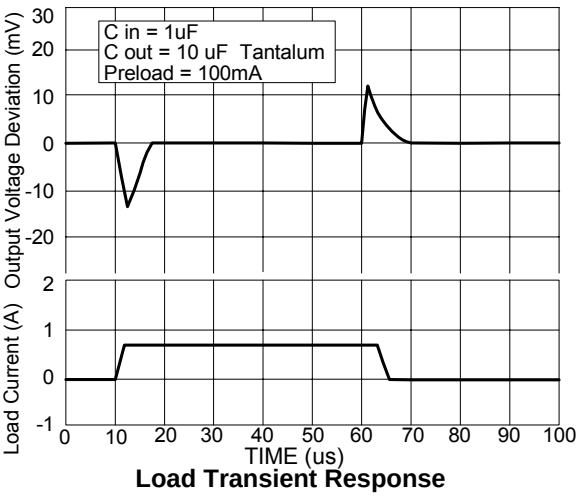

Load Transient Response

■ Marking Information

(1) SOT223-3L

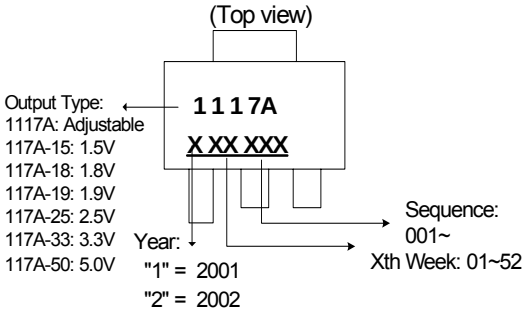

(2) TO252-3L

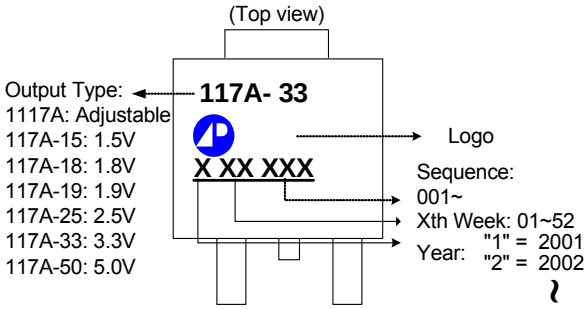

(3) SOT89-3L

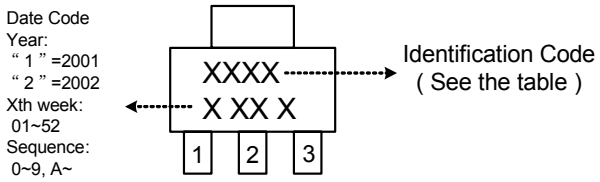

Identification code	Output version
17AA	APE1117A-ADJ
17AB	APE1117A-1.5V
17AC	APE1117A-1.8V
17AG	APE1117A-1.9V
17AD	APE1117A-2.5V
17AE	APE1117A-3.3V
17AF	APE1117A-5.0V